Stainless steel pipe clamp adapters are ideal for attaching bayonet thermocouples or RTD's to steam, process or heat-transfer lines where temperature must be determined at various points. The thermocouple tip is in direct contact with the pipe for first response. No shut down time required to install. They are easy to install and the thermocouple can be detached with a twist. The mounting extension allows lagging for various insulation thickness.
Pipe clamp adapters can be made to attach to pipes from 1/4" to 16".

Larger pipe sizes are available on special order.

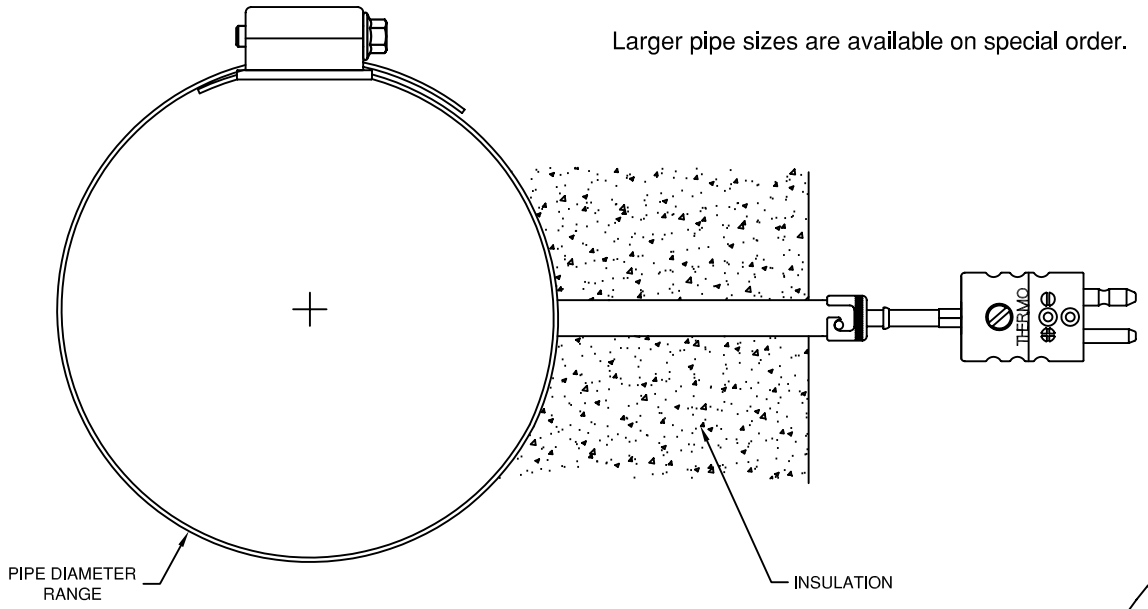

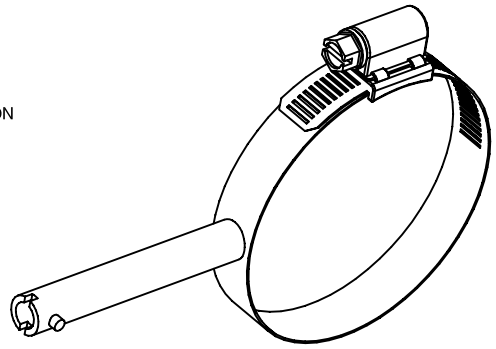

ORDERING CODE:

10949 — PIPE SIZE: 10 — INSULATION THICKNESS: K

CODE	PIPE SIZE		
	NOMINAL PIPE SIZE (NPS)	CLAMP OPENING DIAMETER	
		MINIMUM	MAXIMUM
1	1/4 to 3/8	7/16	25/32
2	1/2 to 3/4	11/16	1 1/4
3	1 to 1 1/2	1 1/16	2
4	2 to 2 1/2	2 1/16	3
5	3 to 3 1/2	3 1/16	4
6	4	3 9/16	4 1/2
7	5	5 1/8	6
9	6	6 1/8	7
10	8	8 1/8	9
11	10	10 1/8	11
12	12	12 1/8	13
13	14	13 5/8	14 1/2
14	16	15 13/16	16 13/16
16	18	17 5/16	18 5/16

CODE	INSULATION THICKNESS	
	THICKNESS	IMM. RANGE
E	1 1/2	1 1/8 to 1 3/4
A	2	2 to 2 5/8
J	2 1/2	2 1/2 to 3 1/8
H	3	3 to 3 5/8
B	3 1/2	3 1/2 to 4 1/8
K	4	4 to 4 5/8
F	4 1/2	4 1/2 to 5 1/8
P	5	5 to 5 5/8
L	6	6 to 6 5/8
G	7	7 to 7 5/8

PIPE SIZE TABLE	
NOMINAL PIPE SIZE (NPS)	ACTUAL PIPE SIZE
1/4	0.540
3/8	0.675
1/2	0.840
3/4	1.050
1	1.315
1 1/4	1.660
1 1/2	1.900
2	2.375
2 1/2	2.875
3	3.500
3 1/2	4.000
4	4.500
5	5.563
6	6.625
8	8.625
10	10.75
12	12.75
14	14.00
16	16.00
18	18.00

The information contained hereon shall be considered the sole property of Thermo Electric Company, Inc. The recipient thereof agrees not to disclose or reproduce said information to parties outside the recipients organization without the written permission of Thermo Electric.